ASSEMBLY INSTRUCTION

A 1pc

Seat

B 1pc

Back

C 2pc

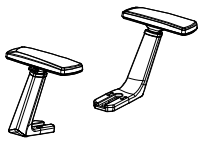

Armrests

D 1pc

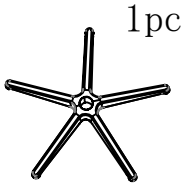

Base

E 1pc

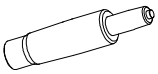

Gas Lift

F 1pc

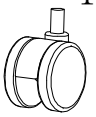

Castors

1 6pc

Seat 6X50

2 6pc

Washer 6X16

3 3pc

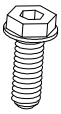

Seat 8X30

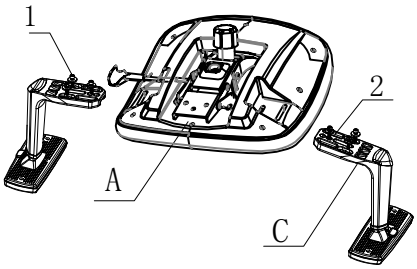

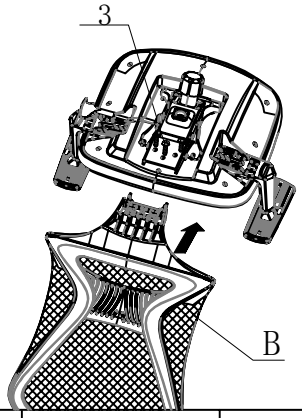

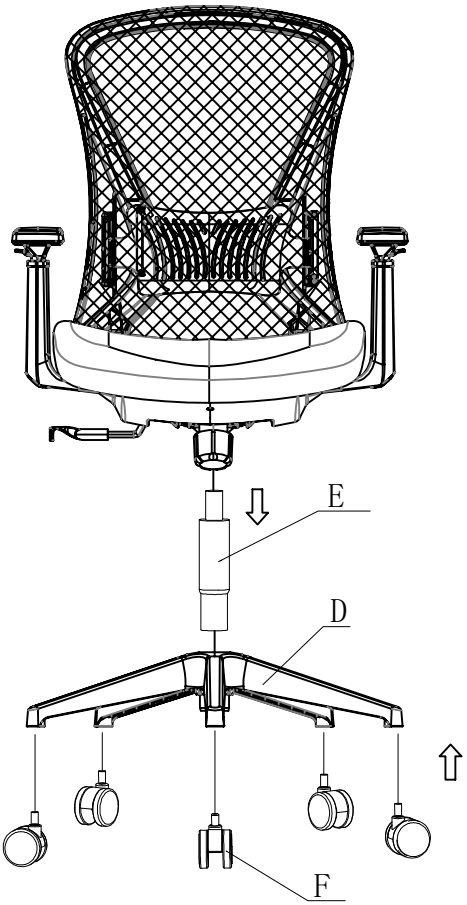

G 1pc

Headrest

H 1pc

Parts

4 2pcs
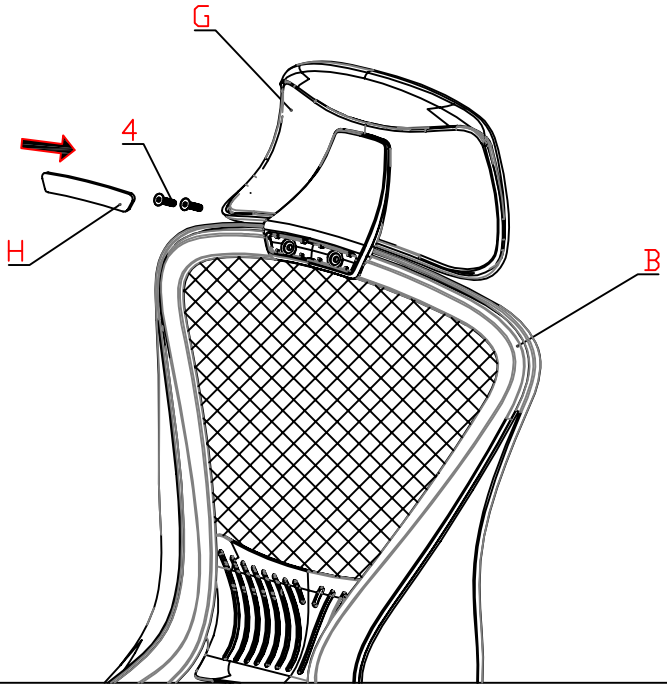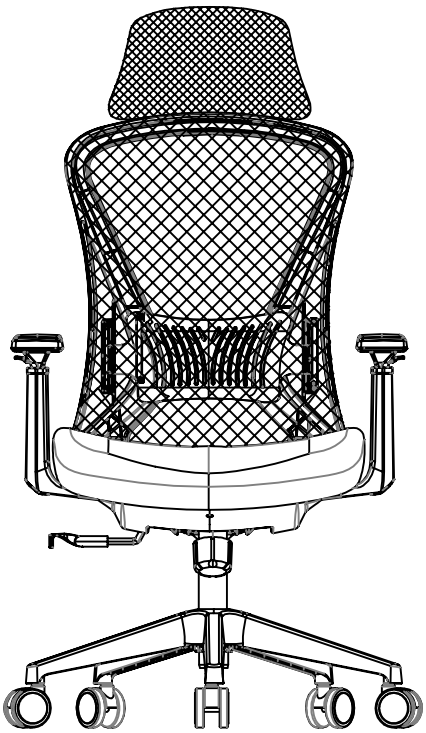
Screw 6X20